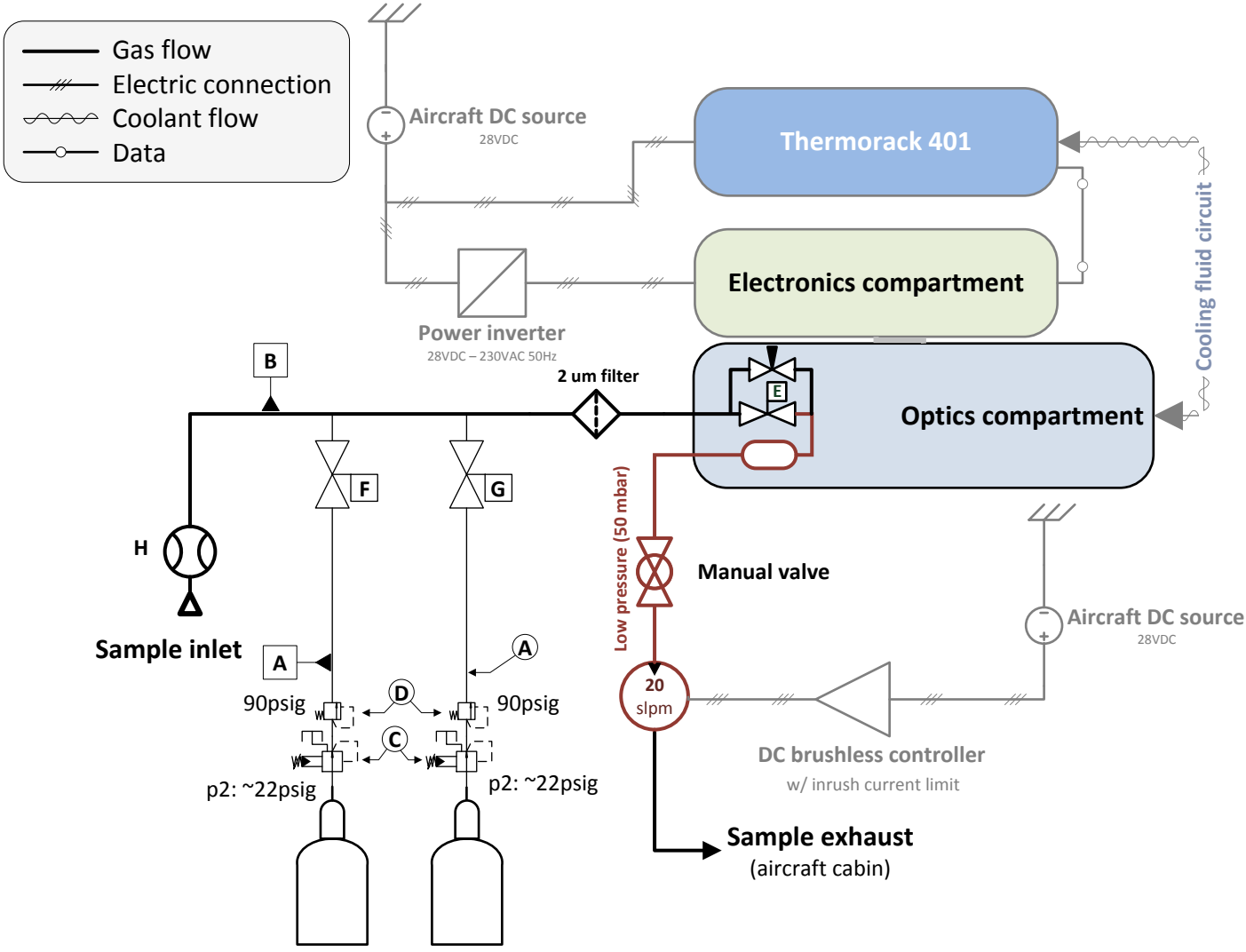

Cal gas mix
UN1956
1850 ppb CH4
500 ppb C2H6
328 ppb N2O
500 ppb CO
400 ppm CO2
Fill zero air

Zero air
UN1002
79.5 % nitrogen
20.5 % oxygen

A: 1/4 in. PFA tubing
B: 3/8 in. PFA tubing
C: Pressure regulator (two-stage)
D: Fast-acting pressure-relief valve air
E: Pressure controller
F: Mass flow controller
G: Mass flow controller
H: Mass flow meter